UNIVERSITY OF CAMBRIDGE INTERNATIONAL EXAMINATIONS
General Certificate of Education
Advanced Subsidiary Level and Advanced Level

CANDIDATE NAME

CENTRE NUMBER | | | | | |

CANDIDATE NUMBER | | | | |

9450032534

PHYSICS **9702/32**

Paper 32 Advanced Practical Skills 2 **October/November 2008**

2 hours

Candidates answer on the Question Paper.

Additional Materials: As listed in the Confidential Instructions.

READ THESE INSTRUCTIONS FIRST

Write your Centre number, candidate number and name on all the work you hand in.
Write in dark blue or black pen.
You may use a soft pencil for any diagrams, graphs or rough working.
Do not use staples, paper clips, highlighters, glue or correction fluid.
DO **NOT** WRITE IN ANY BARCODES.

Answer **both** questions.
You will be allowed to work with the apparatus for a maximum of one hour for each question.
You are expected to record all your observations as soon as these observations are made, and to plan the presentation of the records so that it is not necessary to make a fair copy of them. The working of the answers is to be handed in.
Additional answer paper and graph paper should be submitted only if it becomes necessary to do so.
You are reminded of the need for good English and clear presentation in your answers.

At the end of the examination, fasten all your work securely together.
All questions in this paper carry equal marks.

For Examiner's Use	
1	
2	
Total	

This document consists of **8** printed pages and **4** blank pages.

© UCLES 2008

BLANK PAGE

You may not need to use all of the materials provided.

For Examiner's Use

1 In this experiment you will investigate the equilibrium position of a pivoted wooden strip as the turning load on it is varied.

(a) The equipment is set up as shown in Fig. 1.1.

(i) Add sand to the plastic container until the angle θ is between 5° and 10°.

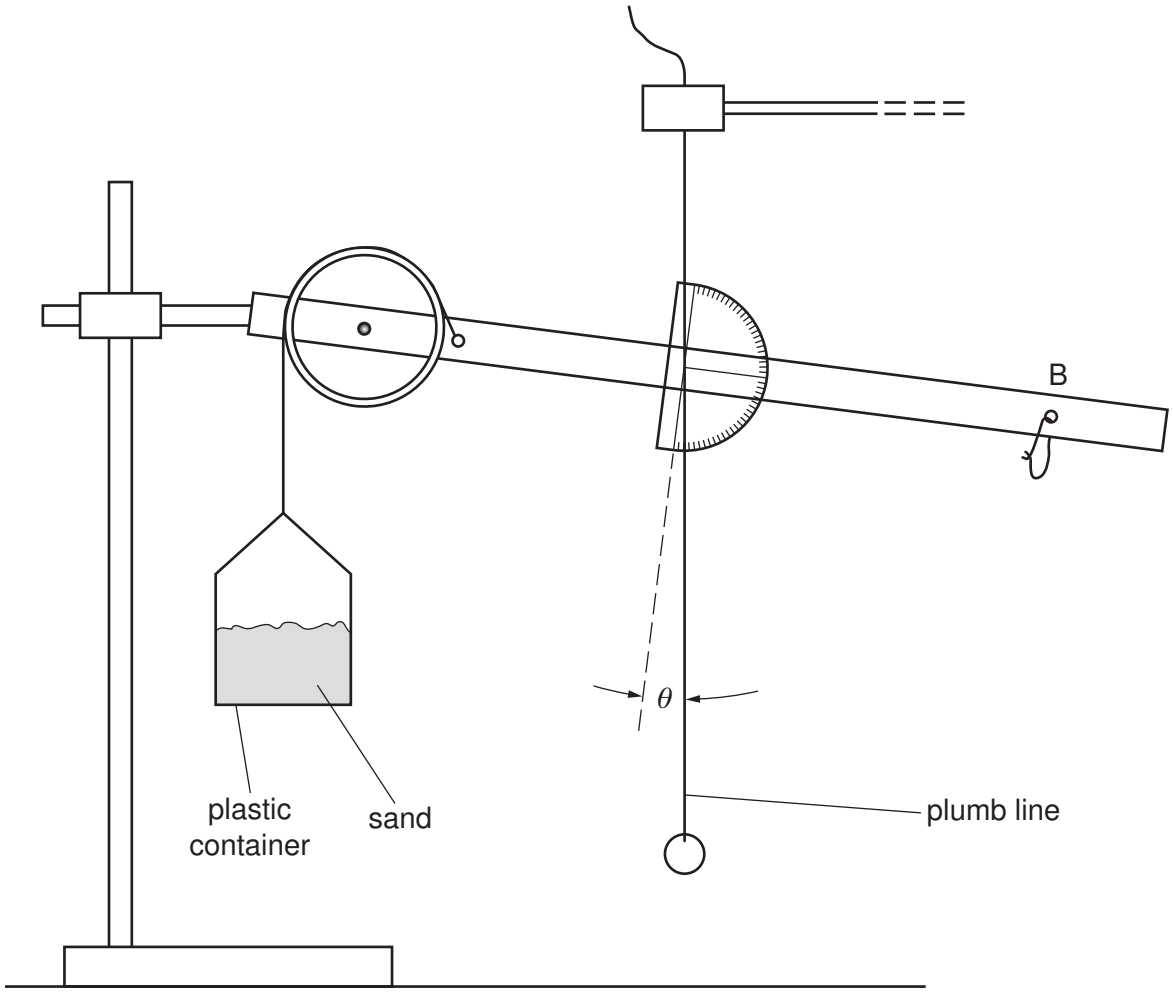

Fig. 1.1

(ii) Measure and record the value of θ.

θ = ... °

(b) Add n paper clips to the string loop at B and repeat **(a)(ii)** until you have six sets of values of n and θ, with θ in the range 5° to 60°. You may bend the paper clips if you wish.

Include values of $\frac{1}{\cos\theta}$ in your table of results.

For Examiner's Use

(c) Plot a graph of $\frac{1}{\cos\theta}$ on the y-axis against n on the x-axis and draw the line of best fit.

(d) Determine the gradient and y-intercept of the line.

gradient = ...

y-intercept = ...

© UCLES 2008

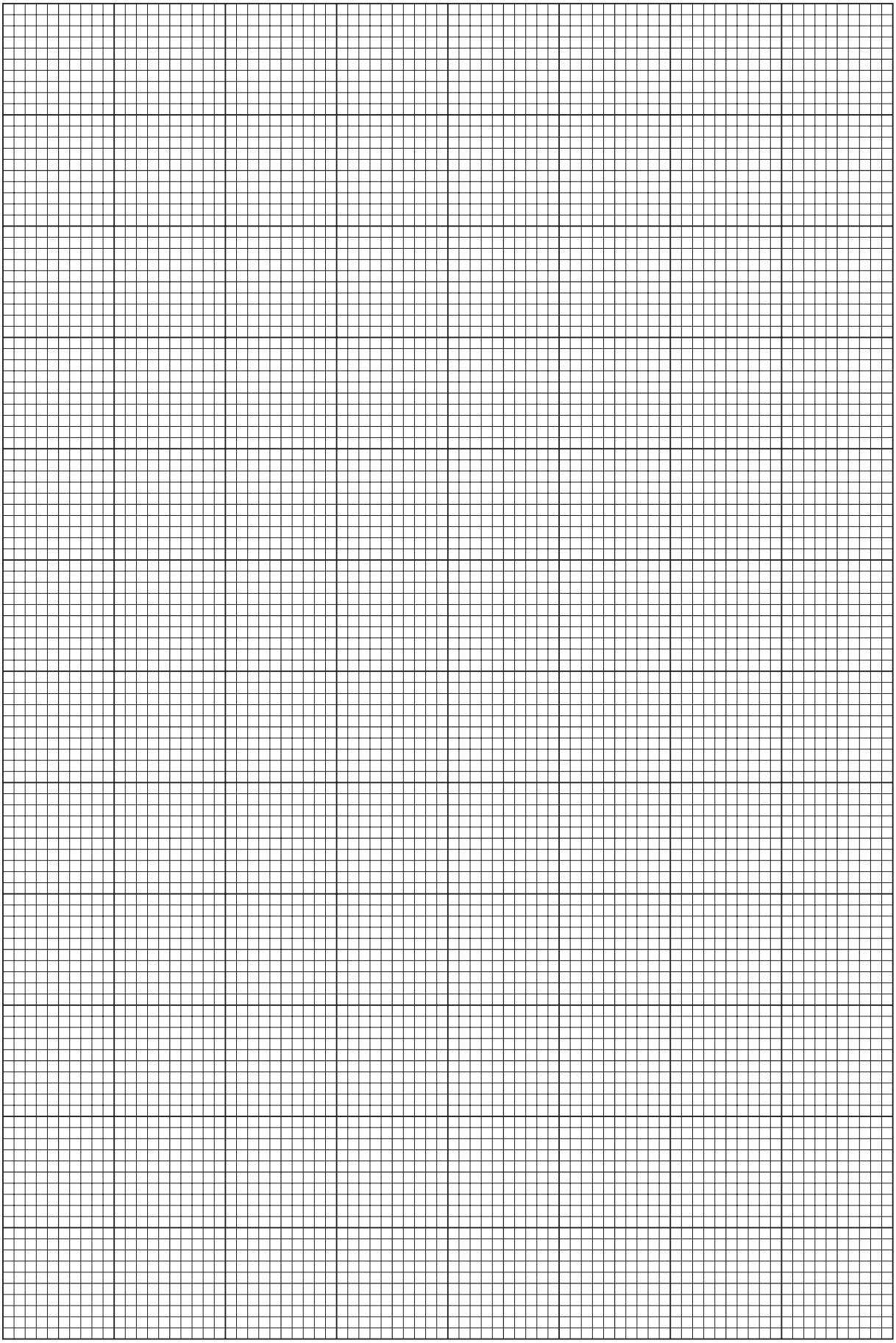

For Examiner's Use

For Examiner's Use

(e) The formula that relates θ and n is

$$\frac{1}{\cos\theta} = 2kmn + kM$$

where k is a constant, m is the mass of one paperclip and M is the mass of the wooden strip and protractor.
The value of m is written on a card.

Use your answers from **(d)** to determine values for k and M.

k = ...g^{-1}

M = ...g

BLANK PAGE

Please turn over for Question 2.

You may not need to use all of the materials provided.

For Examiner's Use

2 In this experiment you will investigate how the period of oscillation of a metal strip varies with its length.

(a) You are provided with a metal strip with a mass fixed to it at one end.

Clamp the strip between the two blocks of wood, so that the length l between the blocks and the centre of the mass is about 20 cm as shown in Fig. 2.1.

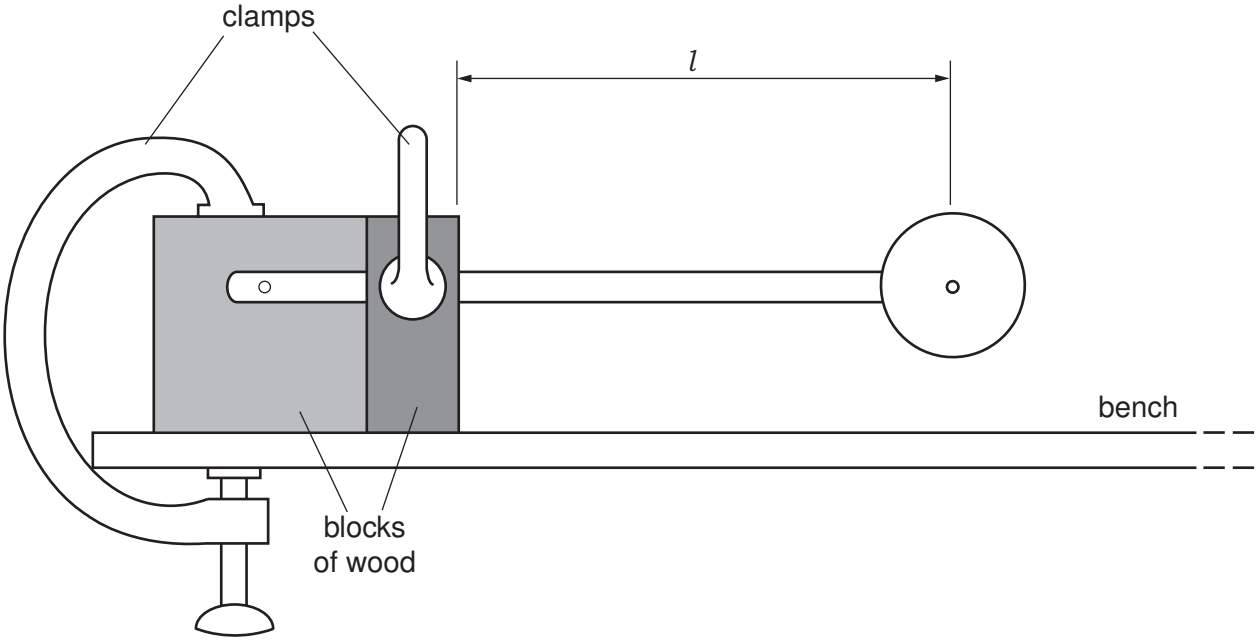

Fig. 2.1

(b) (i) Measure the length l.

l = ... cm

(ii) Estimate the percentage uncertainty in your value of l.

percentage uncertainty = ...%

(iii) Calculate the value of l^3.

l^3 = ... cm^3

(iv) Justify the number of significant figures you have given for l^3.

.....

.....

© UCLES 2008

(c) Pull the mass about 2 cm to one side and release it so that it oscillates.

Take measurements to determine the period of oscillation T.

T = ... s

(d) Adjust the length l to about 15 cm.

Measure this new length l and repeat **(b)(iii)** and **(c)**.

l = ... cm

l^3 = ... cm^3

T = ... s

(e) Explain whether your results support the idea that T^2 is proportional to l^3.

.....

.....

.....

.....

.....

For Examiner's Use

For Examiner's Use

(f) (i) State four sources of error or limitations of the procedure in this experiment.

1. .....

.....

2. .....

.....

3. .....

.....

4. .....

.....

(ii) Suggest four improvements that could be made to the experiment. You may suggest the use of other apparatus or different procedures.

1. .....

.....

2. .....

.....

3. .....

.....

4. .....

.....

© UCLES 2008

BLANK PAGE

BLANK PAGE

Permission to reproduce items where third-party owned material protected by copyright is included has been sought and cleared where possible. Every reasonable effort has been made by the publisher (UCLES) to trace copyright holders, but if any items requiring clearance have unwittingly been included, the publisher will be pleased to make amends at the earliest possible opportunity.

University of Cambridge International Examinations is part of the Cambridge Assessment Group. Cambridge Assessment is the brand name of University of Cambridge Local Examinations Syndicate (UCLES), which is itself a department of the University of Cambridge.